DIGITBREAK

DIGITBRAIN

Digital Twin to optimize design of cars braking system assembly line

This project has received funding from the European Union's Horizon 2020 research and innovation programme under grant agreement No 952071

COSBERG innovaction

ENGINSOFT

MADE Competence Center I4.0

DIGITBRAIN

WHAT IS DIGITbrain ?

DIGITBRAIN

DIGITbrain is an EU innovation program to give **SMEs** easy access to digital twins. Using a **Digital Twin**, companies can rationalise the manufacturing process, make predictions regarding expected machine failures and can predict maintenance needs.

CORE TECHNICAL AND ADMINISTRATIVE PARTNERS

EXPERIMENT PARTNERS

Network of DIHs

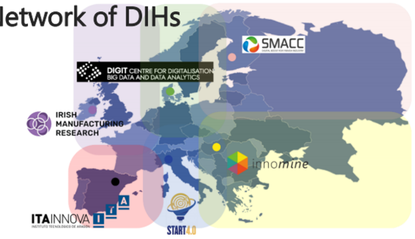

This project has received funding from the European Union's Horizon 2020 research and innovation programme under grant agreement No 952071

DIGITBRAIN

MISSION

This project has received funding from the European Union's Horizon 2020 research and innovation programme under grant agreement No 952071

MISSION

Deploy Digital Twin to **optimise** design and engineering of manufacturing assembly line to ensure resilience, efficiency and productivity in global value chain.

This project has received funding from the European Union's Horizon 2020 research and innovation programme under grant agreement No 952071

STRATEGY

This project has received funding from the European Union's Horizon 2020 research and innovation programme under grant agreement No 952071

STRATEGY

Develop a new efficient approach in **designing and engineering of cars** braking system assembly line, throughout its own life cycle, simulating machines in virtual model (simulation based) before physical implementation or reconfiguration steps, in order to stress in advance critical points of productivity, potential failures, quality and flexibility.

This project has received funding from the European Union's Horizon 2020 research and innovation programme under grant agreement No 952071

CHALLENGE

This project has received funding from the European Union's Horizon 2020 research and innovation programme under grant agreement No 952071

CHALLENGE

1. Providing a first-time right architecture, by **balancing processes**, sub-processes, buffers sizes;

This project has received funding from the European Union's Horizon 2020 research and innovation programme under grant agreement No 952071

CHALLENGE

1. Providing a first-time right architecture, by **balancing processes**, sub-processes, buffers sizes;

2. **Providing the right mechanical solutions**, by predicting critical problems before physical equipment testing to avoid wrong sizing/speed, force, torque/potential interferences, collisions or defect;

This project has received funding from the European Union's Horizon 2020 research and innovation programme under grant agreement No 952071

CHALLENGE

1. Providing a first-time right architecture, by **balancing processes**, sub-processes, buffers sizes;

2. **Providing the right mechanical solutions**, by predicting critical problems before physical equipment testing to avoid wrong sizing/speed, force, torque/potential interferences, collisions or defect;

3. **Guaranteeing performances** (rates, availability, quality) complying with customer's requirements;

This project has received funding from the European Union's Horizon 2020 research and innovation programme under grant agreement No 952071

CHALLENGE

1. Providing a first-time right architecture, by **balancing processes**, sub-processes, buffers sizes;

2. **Providing the right mechanical solutions**, by predicting critical problems before physical equipment testing to avoid wrong sizing/speed, force, torque/potential interferences, collisions or defect;

3. **Guaranteeing performances** (rates, availability, quality) complying with customer's requirements;

4. **Enabling the re-configuration of the machines** to support different scenarios: new product variants, revamping, technology upgrading, by estimating the impact on the current design.

This project has received funding from the European Union's Horizon 2020 research and innovation programme under grant agreement No 952071

GOALS

This project has received funding from the European Union's Horizon 2020 research and innovation programme under grant agreement No 952071

GOALS

1. **Developing, integrating and demonstrating a novel Simulation Based Digital Twin** (SBDT) of a car brake assembly line production system leveraging EnginSoft, Cosberg and MADE competences;

This project has received funding from the European Union's Horizon 2020 research and innovation programme under grant agreement No 952071

GOALS

1. **Developing, integrating and demonstrating a novel Simulation Based Digital Twin** (SBDT) of a car brake assembly line production system leveraging EnginSoft, Cosberg and MADE competences;
2. **Demonstrating advantages** of such **Simulation Based Digital Twin approach** to new potential customers through the integration with DIGITBrain;

This project has received funding from the European Union's Horizon 2020 research and innovation programme under grant agreement No 952071

GOALS

1. **Developing, integrating and demonstrating a novel Simulation Based Digital Twin** (SBDT) of a car brake assembly line production system leveraging EnginSoft, Cosberg and MADE competences;

2. **Demonstrating advantages** of such **Simulation Based Digital Twin approach** to new potential customers through the integration with DIGITBrain;

3. Enhancing Cosberg ability to **design customized solution** allowing for **improved cost efficien**cy; time consuming, time to market, quality and reliability;

This project has received funding from the European Union's Horizon 2020 research and innovation programme under grant agreement No 952071

GOALS

1. **Developing, integrating and demonstrating a novel Simulation Based Digital Twin** (SBDT) of a car brake assembly line production system leveraging EnginSoft, Cosberg and MADE competences;

2. **Demonstrating advantages** of such **Simulation Based Digital Twin approach** to new potential customers through the integration with DIGITBrain;

3. Enhancing Cosberg ability to **design customized solution** allowing for **improved cost efficien**cy; time consuming, time to market, quality and reliability;

4. **Developing a new Manufacturing As Service (MaaS) business model**, based on **Simulation Based Digital Twin** deployment on the Digital Agora;

This project has received funding from the European Union's Horizon 2020 research and innovation programme under grant agreement No 952071

GOALS

1. **Developing, integrating and demonstrating a novel Simulation Based Digital Twin** (SBDT) of a car brake assembly line production system leveraging EnginSoft, Cosberg and MADE competences;

2. **Demonstrating advantages** of such **Simulation Based Digital Twin approach** to new potential customers through the integration with DIGITBrain;

3. Enhancing Cosberg ability to **design customized solution** allowing for **improved cost efficien**cy; time consuming, time to market, quality and reliability;

4. **Developing a new Manufacturing As Service (MaaS) business model**, based on **Simulation Based Digital Twin** deployment on the Digital Agora;

5. **Exploit DIH Test Before Invest scenario**, facilitating end user market exploitation and replication.

This project has received funding from the European Union's Horizon 2020 research and innovation programme under grant agreement No 952071

METHODOLOGY

This project has received funding from the European Union's Horizon 2020 research and innovation programme under grant agreement No 952071

Pilot assembly line at MADE-
Test before invest

This project has received funding from the European Union's Horizon 2020 research and innovation programme under grant agreement No 952071

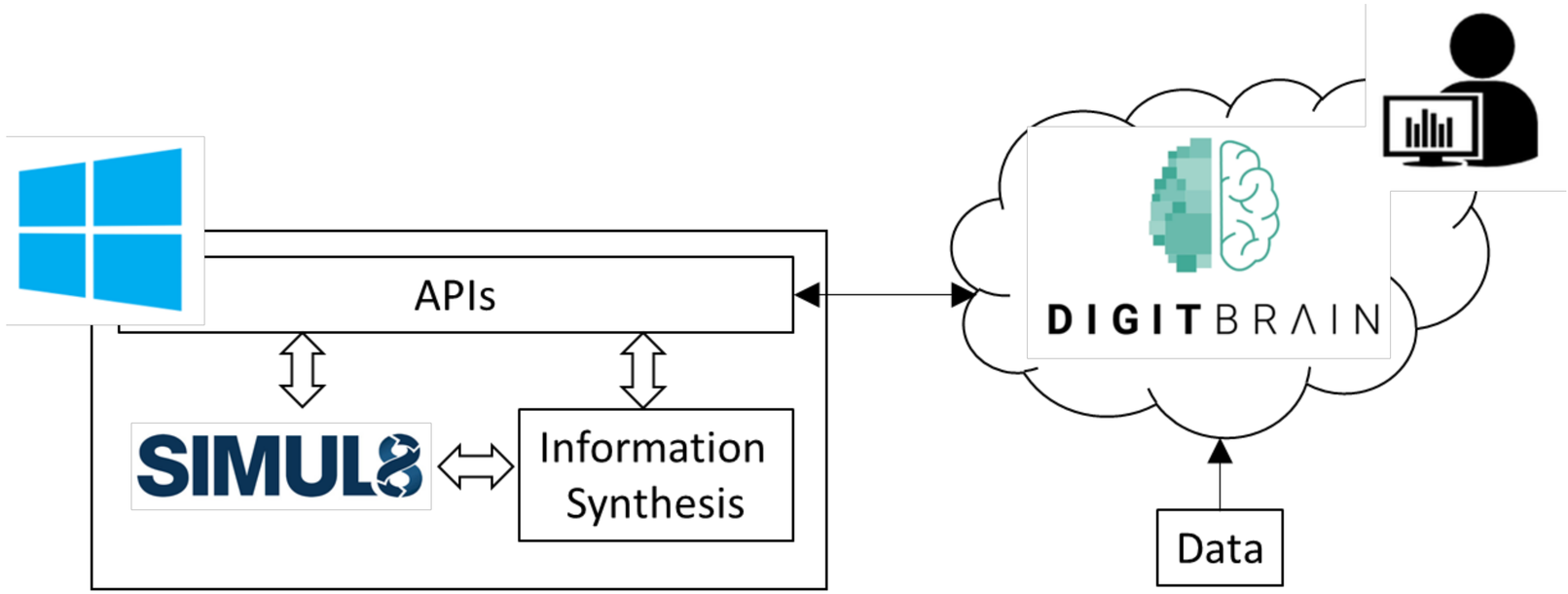

Discrete event **simulation models** of the assembly line;

This project has received funding from the European Union's Horizon 2020 research and innovation programme under grant agreement No 952071

DIGITbrain framework,
including the **Digital Agora.**

This project has received funding from the European Union's Horizon 2020 research and innovation programme under grant agreement No 952071

Development of the solution

#AVAILABILITY

Behaviour and performance modelling and twinning

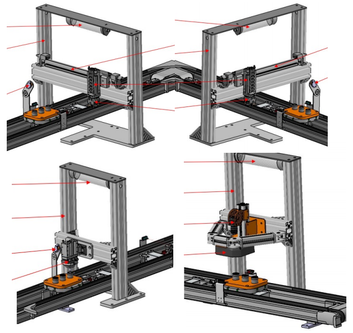

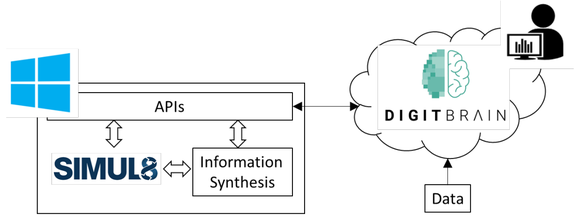

PILOT LINE MODULE ASSEMBLY/DISASSEMBLY (a+b), SEALING (c), VISIONING (d)

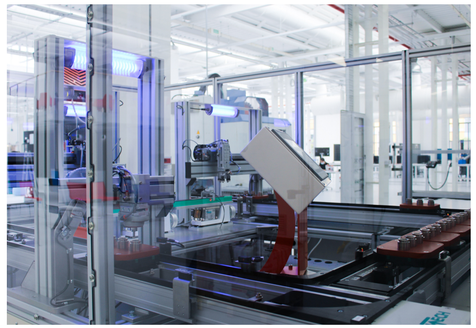

DIGITbrain has received funding from the European Union's Horizon 2020 research and innovation programme under grant agreement No 952071

Development of the solution

#AVAILABILITY

Behaviour and performance modelling and twinning

#PRODUCTIVITY

Productivity improvement of existing system (logical reconfiguration)

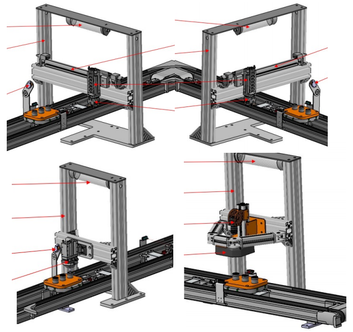

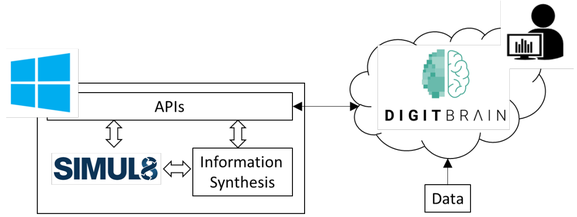

PILOT LINE MODULE ASSEMBLY/DISASSEMBLY (a+b), SEALING (c), VISIONING (d)

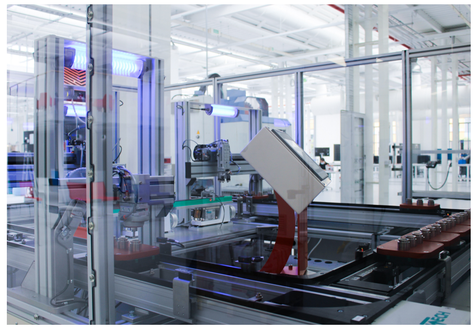

DIGITbrain has received funding from the European Union's Horizon 2020 research and innovation programme under grant agreement No 952071

Development of the solution

#AVAILABILITY
Behaviour and performance modelling and twinning

#PRODUCTIVITY
Productivity improvement of existing system (logical reconfiguration)

#TECHUPGRADE
Technology upgrading and physical reconfiguration

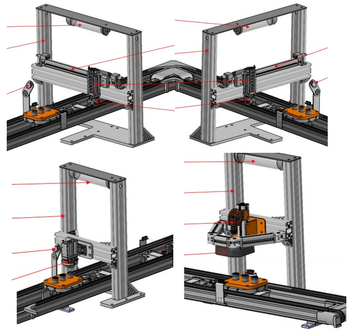

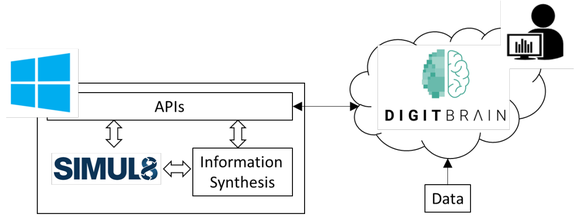

PILOT LINE MODULE ASSEMBLY/DISASSEMBLY (a+b), SEALING (c), VISIONING (d)

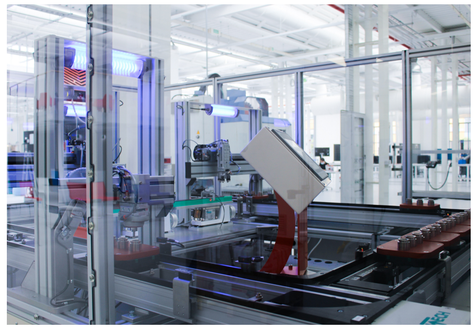

DIGITbrain has received funding from the European Union's Horizon 2020 research and innovation programme under grant agreement No 952071

PARTNERS

This project has received funding from the European Union's Horizon 2020 research and innovation programme under grant agreement No 952071

MADE Competence Center I4.0

DIGITAL INNOVATION HUB

Test before invest
Project management
Dissemination and ecosystem

ENGINSOFT

INDIPENDENT SOFTWARE VENDOR

Simulation based DT **Simul8**
Integration in **DIGITbrain** library

cosberg innovaction

END USER

Provision of requirements
Validation of solution
Impact analysis

This project has received funding from the European Union's Horizon 2020 research and innovation programme under grant agreement No 952071

MANAGEMENT

#001 Activity Managment

DESIGN

#002 Definition of requirements, Model, Data and Algorithm

#003 Model and App Development

SIMULATION

#004 Definition of rules and actions

#005 Digital Twin Set up

#006 Digital Simulation of scenario

DIGITBRAIN INTEGRATION

#007 Leverage EGIcloud resources

#008 Containerization of software

#009 Model integration and publish on Digital Agora

#010 Results, impact Analysis

GO TO MARKET

#011 Business model and IPR

#012 Dissemination and stakeholder engagement

This project has received funding from the European Union's Horizon 2020 research and innovation programme under grant agreement No 952071

THANK YOU FOR YOUR INTEREST!

CONTACT
Maria.rossetti@made-cc.eu
Project manager
MADE Competence Center

This project has received funding from the European Union's Horizon 2020 research and innovation programme under grant agreement No 952071